TROGEAR Catamaran Brackets

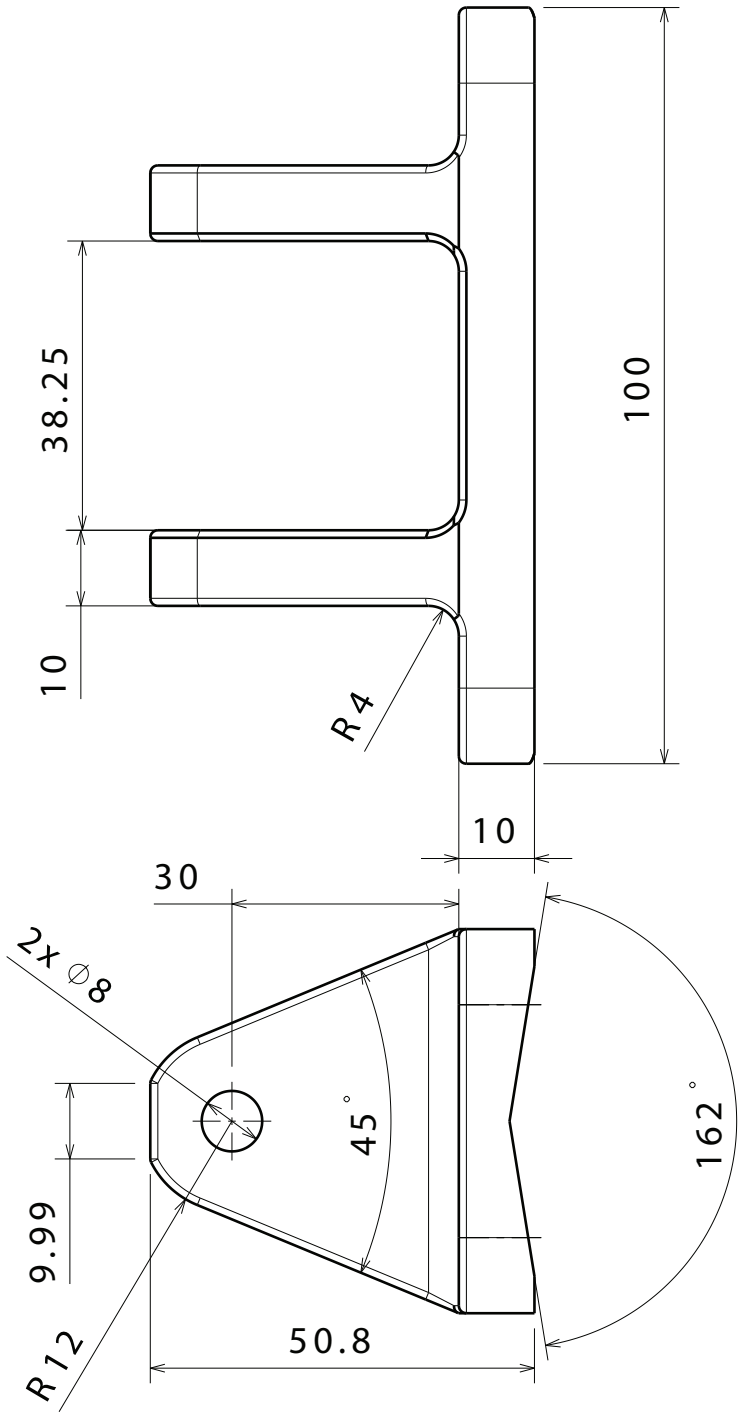

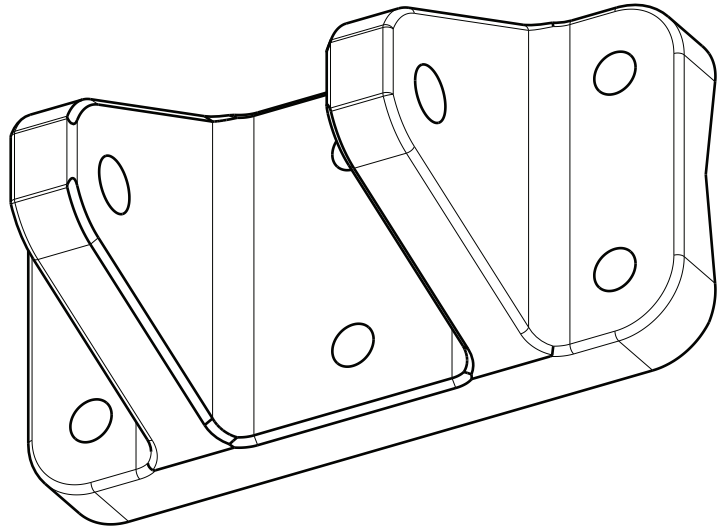

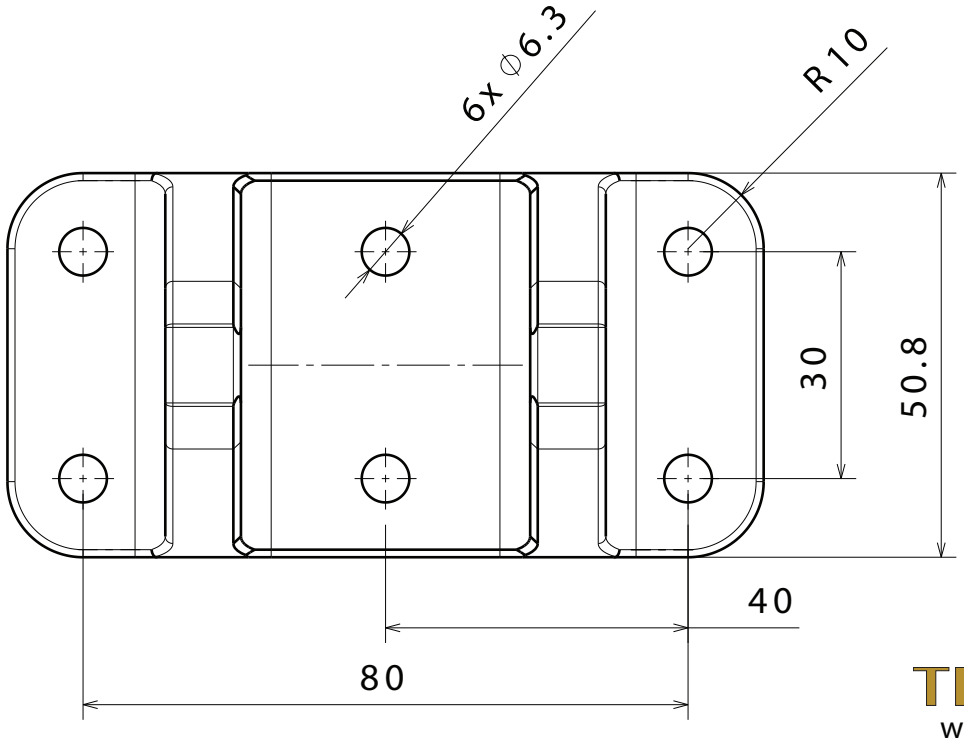

TROGEAR®
www.trogear.com